MINIATURE F7 CONTACT FOR MULTI & HYBRID FIBRE OPTIC CONNECTORS

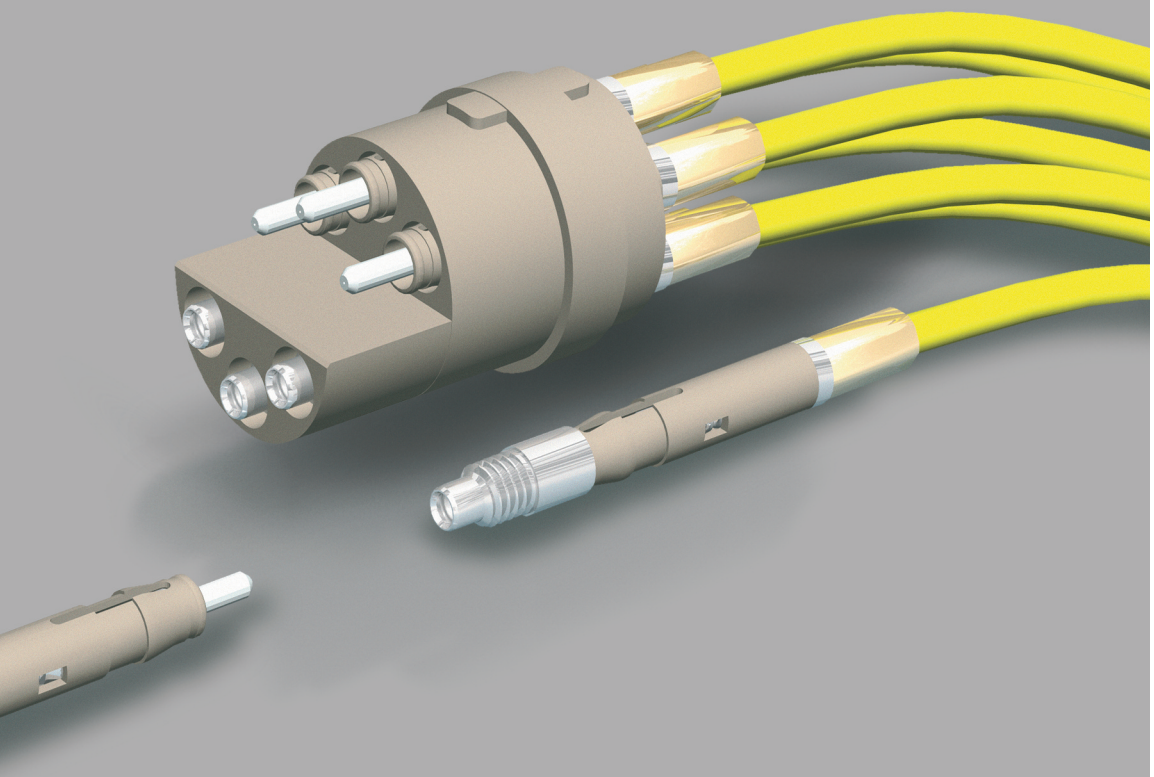

LEMO®

MINIATURE FIBRE-OPTIC F7 CONTACT FOR MULTIFIBRE OR MIXED OPTICAL/ELECTRICAL OF THE 1K-5K AND 1B-5B SERIES

In addition to the existing F2 fibre optic contact shown in our catalogue of Fibre-Optic connectors No 5, the B and K series can now also be fitted with the new miniature F7 contact. The main benefits of using this contact are:

– Reduced size allowing increased contact density. As an example, a 4-channel fibre optic connector is now possible in series 3K/3B.

– Use of industry standard 1.25 mm diameter ferrule and polishing processes.

Contact design is based on the well-proven F2. Contacts fit onto buffered fibres or semitight jacket cables up to 2 mm in diameter.

This brochure shows only a sample of the available models of connectors. Refer to our catalogue No 5 for more detailed information of the full range of LEMO fibre optic connectors. Refer also to catalogue No 5 for accessories or tools specific to the electrical contacts used in hybrid connectors.

Certified Quality System
SQS
ISO 9001
Reg. No. 10472 - 03

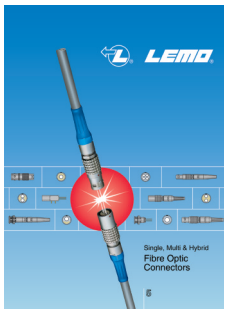

5 Fibre Optic Connectors

No reproduction or use without express permission of editorial or pictorial content, in any manner.
LEMO SA reserve the right at all times to modify and improve specifications without any notification.

F7 Fibre Optic Contact

Introduction

The F7 type contact is designed to fit multi fibre connectors or mixed fibre optical/electrical connectors from 1B to 5B, 1K to 5K series. The design is based on the well proven F2 contact.
Its main features are as follows:
– Ceramic ferrules diameter 1.25 mm
– Simple and fast polishing ensuring the physical contact of the fibre end face
– After mounting on the cable, the contact is very easily installed in the main connector insulator, the particular shape of the contact body retains it in the insulator
– Single type of cable assembly, regardless of connector shell used
– The alignment tube can be easily removed in order to clean the fibre end face.
This contact makes it possible to use single fibre cables with single-mode or multi-mode fibres of the following sizes; 9/125, 50/125 and 62.5/125.

Part Section Showing Internal Components

Female contact

1. body with holder
2. ferrule with holder
3. spring
4. crimp ferrule
5. alignment tube with support

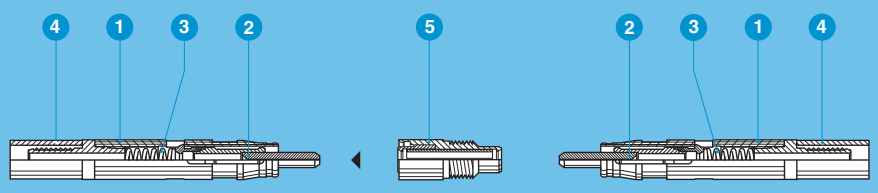

Male contact

1. body with holder
2. ferrule with holder
3. spring
4. crimp ferrule

Technical Characteristics

Material and Treatment

Component	Material	Surface treatment (µm)	
		Cu	Ni
Body	PEEK	without treatment	
Ferrule	Ceramic	without treatment	
Holder	Alloy CuNiZn	without treatment	
Crimp holder	Brass	0.5	3
Spring	Stainless steel	without treatment	
Crimp ferrule	Cu 99	0.5	3
Support	Alloy CuNiZn	without treatment	
Alignment tube	Ceramic	without treatment	

Mechanical and Environmental

Characteristic	Value	Standard
Mating durability	> 1000 cycles	IEC 61300-02-02
Damp heat steady state	up to 93 % RH at 40°C	IEC 61300-02-19
High temperature	+85°C	IEC 61300-02-18
Low temperature	-40°C	IEC 61300-02-17
Cable retention	100 N	IEC 61300-02-04
Vibration (3 axes)	100 to 2000 Hz, 2 hrs	–
Change of temperature	-40 to +75°C	IEC 61300-02-22
Temperature/humidity	-10 to +65°C at 93 % RH	IEC 61300-02-21

Optical

Characteristic	Value	Standard	Method
Average insertion loss fibre 9/125 µm	0.18 dB	IEC 61300-03-34	Method 2
Average insertion loss fibre 50/125 µm	0.25 dB	IEC 61300-03-34	Method 2
Return loss fibre 9/125 µm (UPC)	≥45 dB	IEC 61300-03-06	Coupler Method
Return loss fibre 9/125 µm (Hand polish)	>25 dB	IEC 61300-03-06	Coupler Method

Part Number Example

F7 contacts are designed in 2 different lengths:
– the short version for 1B/K, 2B/K and 3B/K series, code E.
– the long version for 4B/K and 5B/K series, code L.

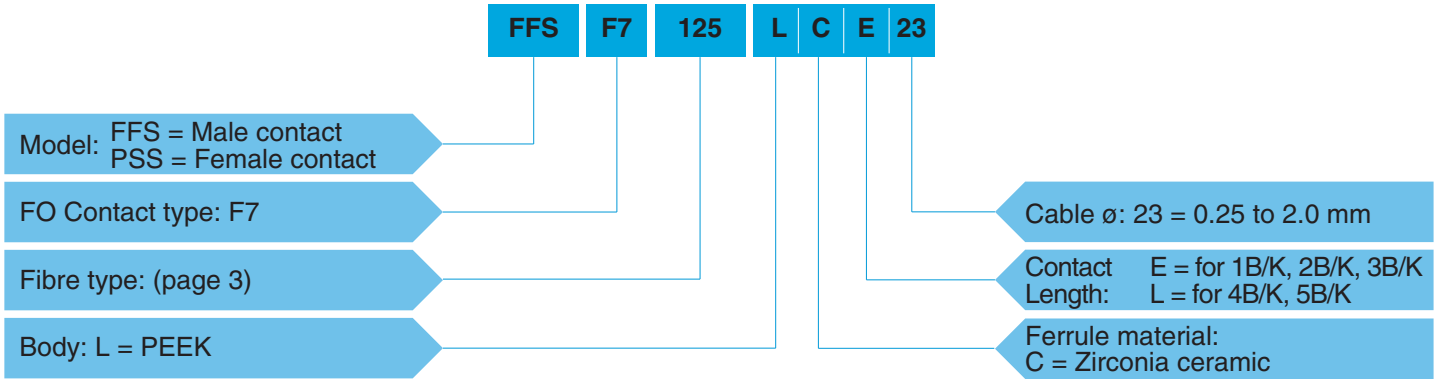

FFS.F7.125.LCE23 = Male F7 type fibre optic contact, ferrule bore diameter of 125 µm, PEEK body, Zirconia ceramic ferrule, contact length for 1B/K, 2B/K or 3B/K series, for cable with diameter max = 2.0 mm.

Model - FO Contact Type

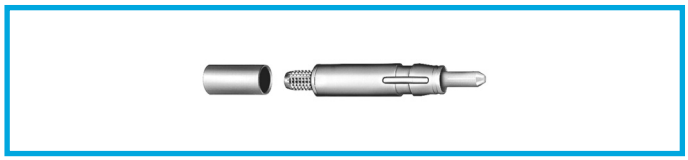

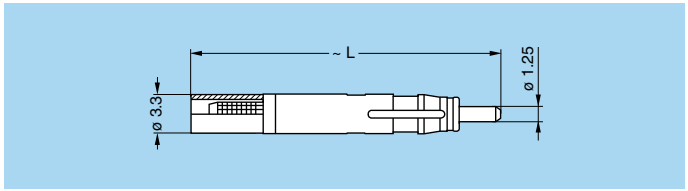

FFS.F7 Male F7 Fibre Optic Contact

Reference		Dimensions (mm)
Model	Series	L
FFS.F7	1B, 1K, 2B, 2K, 3B, 3K	25.8
FFS.F7	4B, 4K, 5B, 5K	32.8

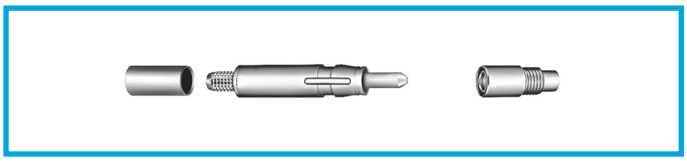

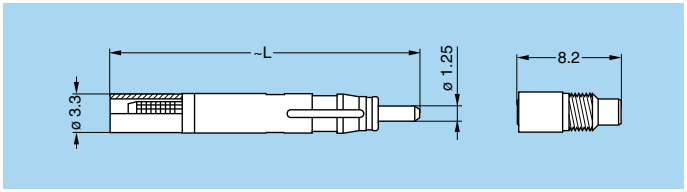

PSS.F7 Female F7 Fibre Optic Contact

Reference		Dimensions (mm)
Model	Series	L
PSS.F7	1B, 1K, 2B, 2K, 3B, 3K	25.8
PSS.F7	4B, 4K, 5B, 5K	32.8

Fibre Type

The choice of the ferrule hole diameter is dependent upon the fibre cladding size. LEMO offers a range of ferrule hole diameters to suit the users' specific requirements.

Reference	ø Core/Cladding (µm)	Ferrule hole diameter (µm)	Note [1]
125	9/125 50/125 62.5/125	125	●
126		126	●
128		128	○

● First choice alternative ○ Special order alternative

Accessories

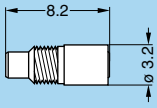

PSS Alignment device for F7 fibre optic contact

Part number
PSS.F7.290.NZZ

Note: Alignment device should be ordered as replacement item.

male

female

FGG-EGG Insulators

Insulators for 1B-5B and 1K-5K series vary according to the fibre optic contact type. For the new F7 contact insulators are:

	FO Contact Type F7	Insulator part number	
		Male contact	Female contact
1B/1K	92A	FGG.1B.302.FL	EGG.1B.402.FL
2B/2K	03A	FGG.2B.302.FL	EGG.2B.402.FL
	93B	FGG.2B.324.FL	EGG.2B.424.FL
3B/3K	03C	FGG.3B.304.FL	EGG.3B.404.FL
	95B	FGG.3B.344.FL	EGG.3B.444.FL
4B/4K	03G	FGG.4B.308.FL	EGG.4B.408.FL
	03H	FGG.4B.309.FL	EGG.4B.409.FL
	97B	FGG.4B.362.FL	EGG.4B.462.FL
5B/5K	03R	FGG.5B.316.FL	EGG.5B.416.FL
	03W	FGG.5B.321.FL	EGG.5B.421.FL

1K-5K Series

The new **F7** fibre optic contact has been designed to work in the 1K-5K series.
The main features of these series are as follows:
- Security of the LEMO Push-Pull self-latching system
- Specially designed for outdoors applications. All these models are waterproof when mated and reach a protection index of IP 66-IP 68, according to the IEC 60529 standard
- Protection against accidental contamination or damage to the fibre end face because the ferrules are recessed within the connector shell
- The alignment key (G, A…F, L and R) ensures excellent repeatability of performance during frequent matings
- A choice of configurations of multi fibre or mixed optical/electrical contacts
- The new miniature F7 contact allows hybrid configuration in the 1K series and multi fibre up to 21 channels in the 5K series.

The 1K-5K series consists of ten models which will accept outer cable diameters ranging from 2.6 mm to 23.5 mm.

Interconnections

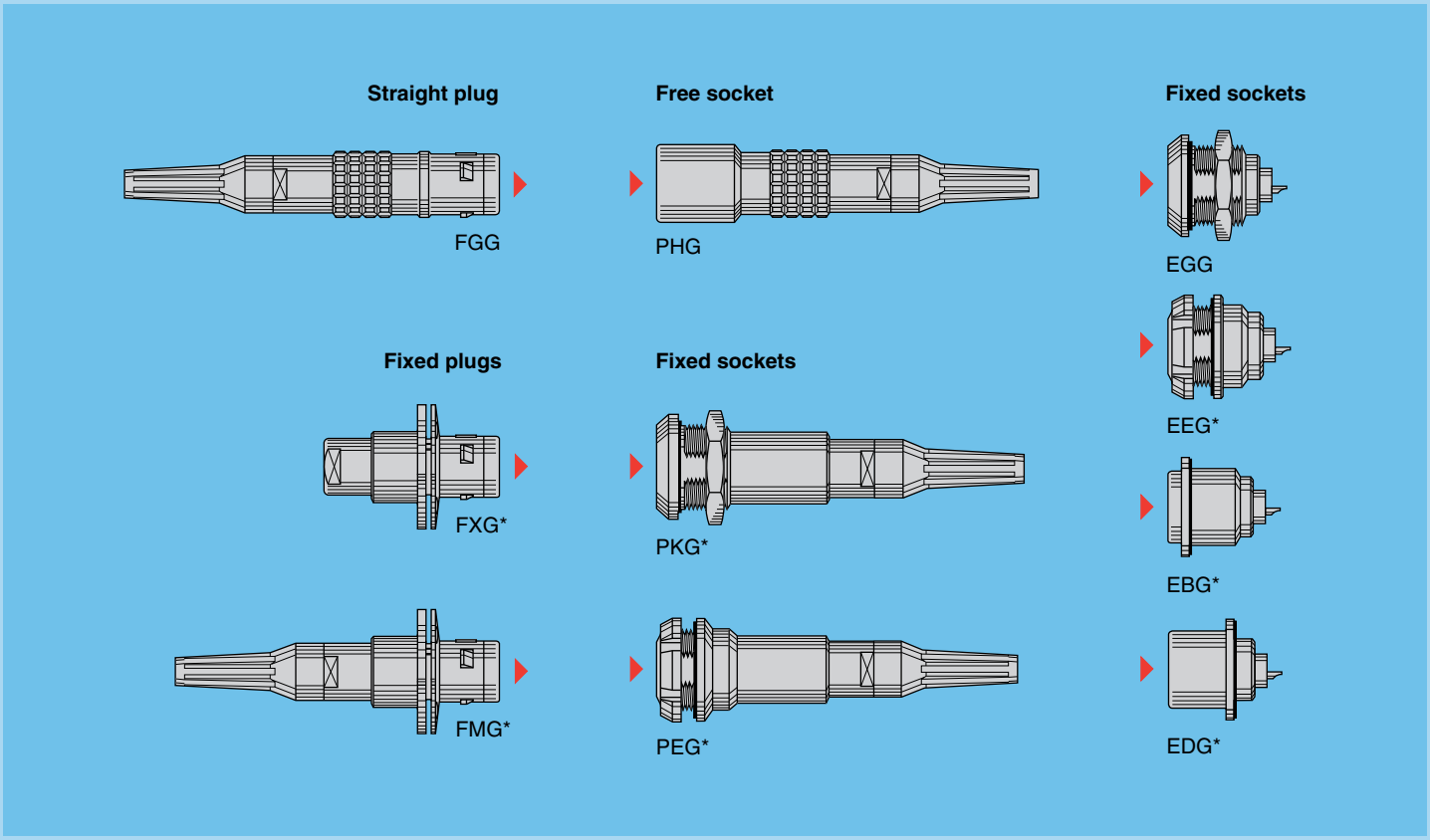

Model Description

EBG Fixed socket with square flange, key (G) or keys (A…F, L and R), four holes fixing
EDG Fixed socket with square flange, key (G) or keys (A…F, L and R), protruding shell and earthing tag, screw fixing
EEG Fixed socket, nut fixing, key (G) or keys (A…F, L and R) (back panel mounting)
EGG Fixed socket, nut fixing, key (G) or keys (A…F, L and R)

FGG Straight plug, key (G) or keys (A…F, L and R), cable adapter and nut for fitting a bend relief
FMG Fixed plug with round flange, four holes fixing, key (G) or keys (A…F, L and R), cable adapter and nut for fitting a bend relief
FXG Fixed plug with round flange, four holes fixing, key (G) or keys (A…F, L and R)
PEG Fixed socket, nut fixing, key (G) or keys (A…F, L and R), cable adapter and nut for fitting a bend relief (back panel mounting)

PHG Free socket, key (G) or keys (A…F, L and R), cable adapter and nut for fitting a bend relief
PKG Fixed socket, nut fixing, key (G) or keys (A…F, L and R), cable adapter and nut for fitting a bend relief

* Not show in this catalogue. Refer to our catalogue No 5.

Certain models and certain key-ways may not be available in all series. Please consult us.

Part Number Example

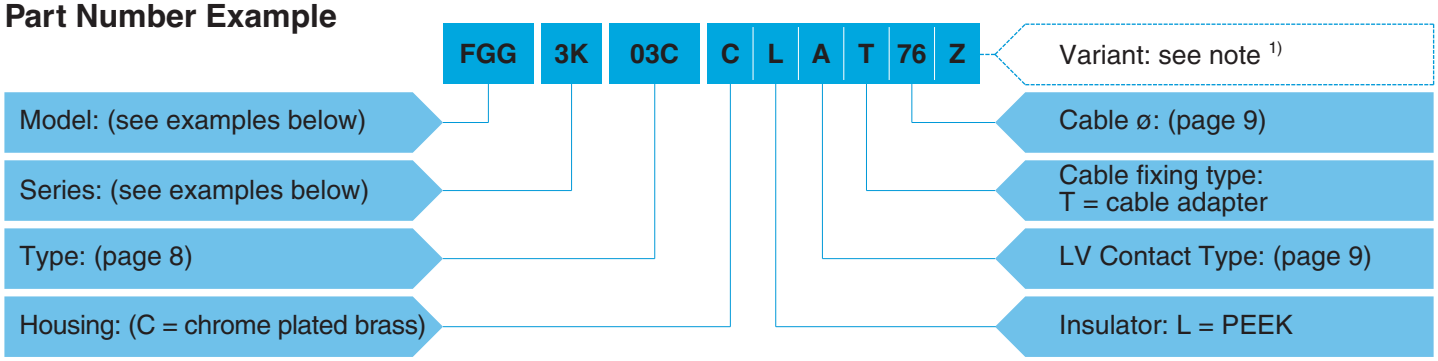

FGG.3K.03C.CLAT76Z = Straight plug with key (G), 3K series, multi-fibre type to accept 4 F7 type fibre optic contacts, chrome-plated brass housing, PEEK insulator, cable fixing type T for 7.5 mm diameter cable, and nut for fitting a bend relief.

Connectors are delivered without fibre optic contacts. F7 fibre optic contacts must be ordered separately according to size and type of fibre (see pages 1 to 3).

Note: 1) The «Variant» position in the reference is used to indicate the presence of a collet nut for fitting the bend relief. The bend relief must be ordered separately.

Sample Models

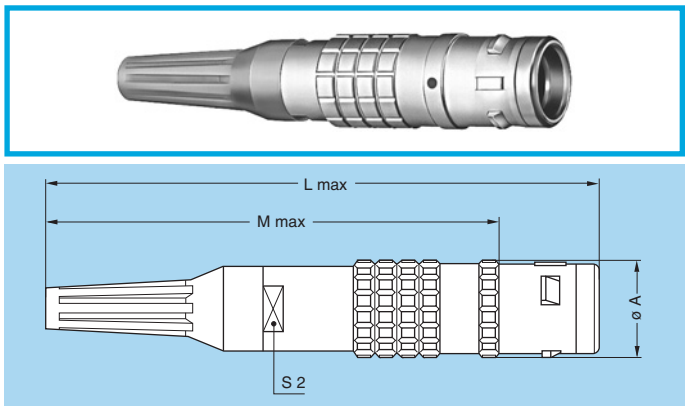

FGG Straight plug, key (G) or keys (A…F, L and R), cable adapter and nut for fitting a bend relief

Reference		Dimensions (mm)			
Model	Series	A	L	M	S2
FGG	1K	13	92	78.0	9
FGG	2K	16	101	85.0	12
FGG	3K	19	109	89.0	15
FGG	4K	25	131	110.5	19
FGG	5K	38	160	135.0	30

Note: The overall length dimension is with bend relief

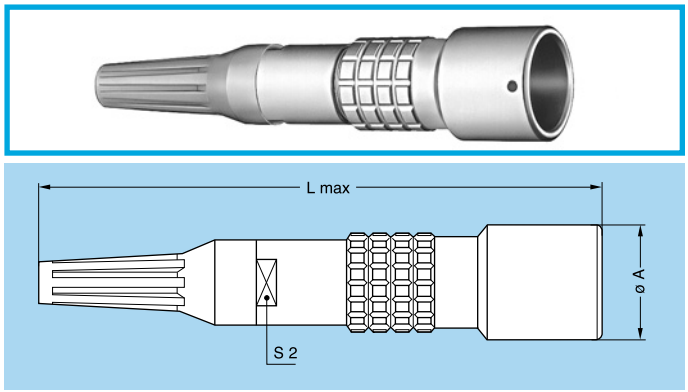

PHG Free socket, key (G) or keys (A…F, L and R), cable adapter and nut for fitting a bend relief

Reference		Dimensions (mm)		
Model	Series	A	L	S2
PHG	1K	15	95.0	9
PHG	2K	19	103.0	12
PHG	3K	23	113.0	15
PHG	4K	29	135.5	19
PHG	5K	42	164.0	30

Note: The overall length dimension is with bend relief

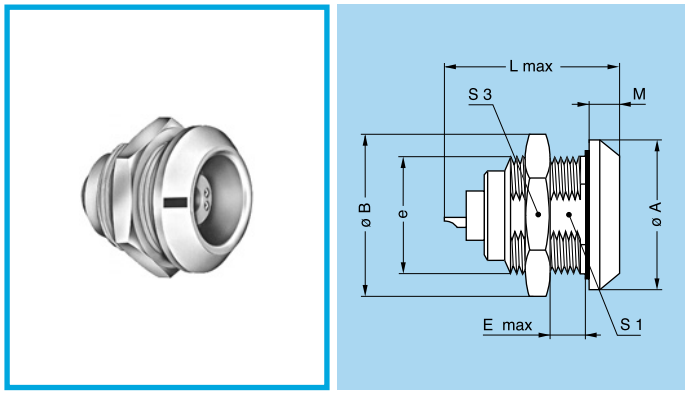

EGG Fixed socket, nut fixing, key (G) or keys (A…F, L and R)

Reference		Dimensions (mm)								
Model	Series	A	B	e	E	L max 1)		M	S1	S3
						F1	F2			
EGG	1K	20	21.5	M16x1.0	9	31.0	41.0	4.5	14.5	19
EGG	2K	25	27.0	M20x1.0	9	31.0	41.0	5.0	18.5	24
EGG	3K	31	34.0	M24x1.0	11	35.5	42.5	6.0	22.5	30
EGG	4K	37	40.5	M30x1.0	9	37.0	41.0	6.5	28.5	36
EGG	5K	55	54.0	M45x1.5	10	40.5	42.0	9.0	42.5	–

Note: 1) The overall length (L) may vary depending upon the type of electrical LV or fibre optic contact fitted.

1B-5B Series

The new **F7** fibre optic contact has been designed to work in the 1B-5B series.
The main features of these series are as follows:
- Security of the LEMO Push-Pull self-latching system
- Protection against accidental contamination or damage to the fibre end face because the ferrules are recessed within the connector shell
- The alignment key (G, A…L, Y and R) ensures excellent repeatability of performance during frequent matings
- A choice of configurations of multi fibre or mixed optical/electrical contacts
- The new miniature F7 contact allows hybrid configuration in the 1B series and multi fibre up to 21 channels in the 5B series.

The 1B-5B series consist of fifteen models. The possible outer cable diameters range from 2.1 to 25 mm.

Interconnections

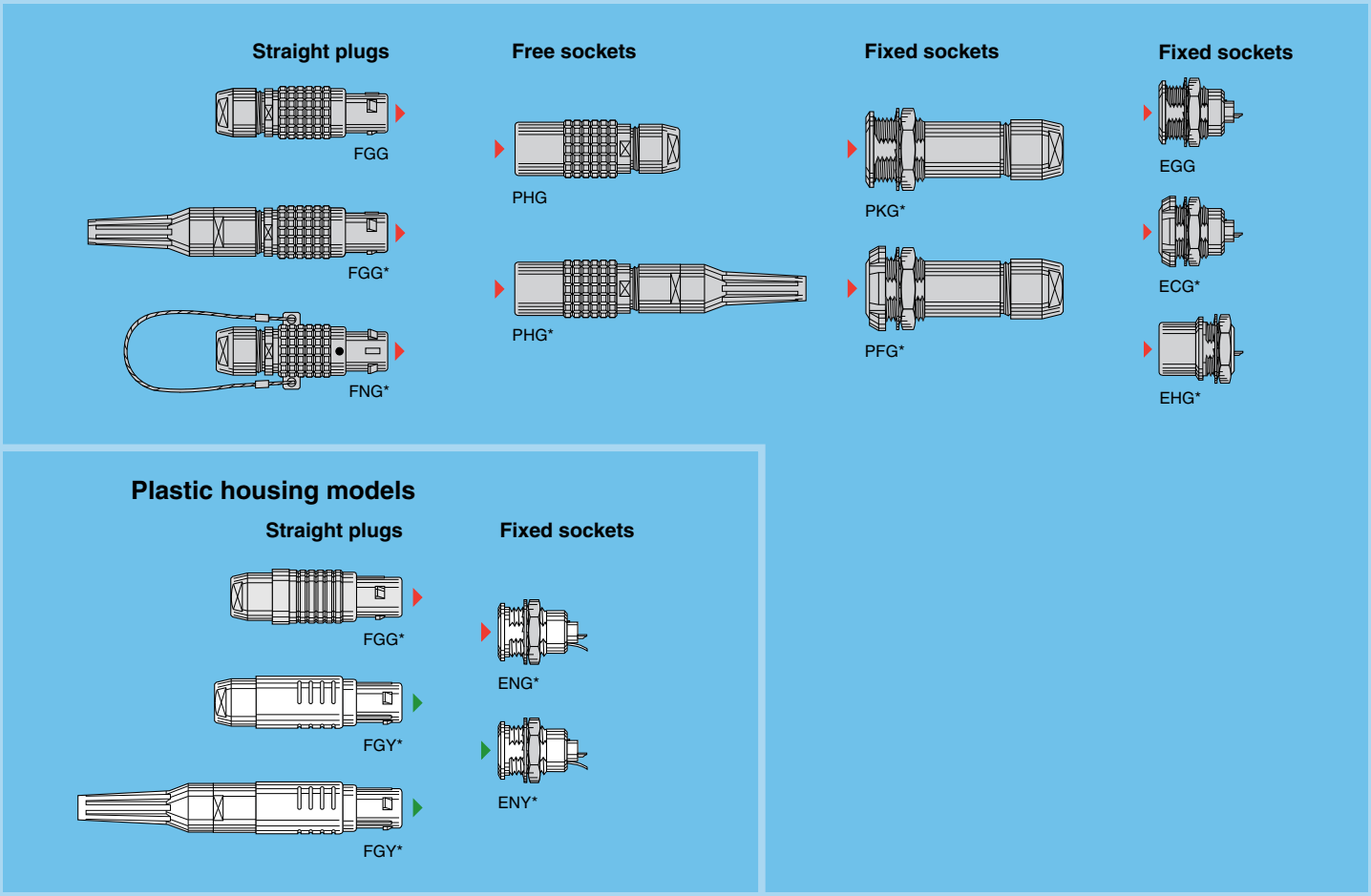

Model Description

ECG Fixed socket, with two nuts, key (G) or keys (A…L and R), (back panel mounting)
EGG Fixed socket, nut fixing, key (G) or keys (A…L and R)
EHG Fixed socket, nut fixing, key (G) or keys (A…L and R) with visible shell
ENG Fixed socket with grounding tab, nut fixing, key (G or J), PEEK outer shell
ENY Fixed socket with grounding tab, nut fixing, keys (Y), PSU or PPSU outer shell
FGG Straight plug, key (G) or keys (A…L and R) and cable collet
FGG Straight plug, key (G) or keys (A…L) cable collet and nut for fitting a bend relief
FGG Straight plug, key (G or J), cable collet, PEEK outer shell
FGY Straight plug, keys (Y), cable collet and PSU or PPSU outer shell
FGY Straight plug, keys (Y), cable collet and PSU or PPSU outer shell and nut for fitting a bend relief
FNG Straight plug, key (G) or keys (A…L and R) and cable collet with lanyard release
PFG Fixed socket, with two nuts, key (G) or keys (A…L and R) and cable collet (back panel mounting)
PHG Free socket, key (G) or keys (A…L and R) and cable collet
PHG Free socket, key (G) or keys (A…L) and cable collet and nut for fitting a bend relief
PKG Fixed socket, nut fixing, key (G) or keys (A…L and R) and cable collet

* Not show in this catalogue. Refer to our catalogue No 5.

Certain models and certain key-ways may not be available in all series. Please consult us.

Part Number Example

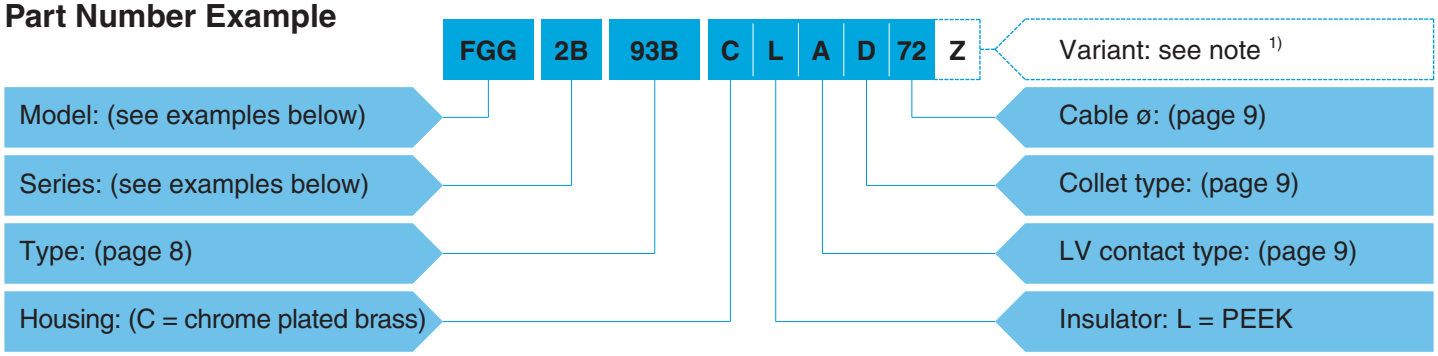

FGG.2B.93B.CLAD72Z = Straight plug with key (G), 2B series, mixed type to accept 2 F7 fibre optic contact and 4 low voltage electrical contacts, chrome-plated brass housing, PEEK insulator, 4 male solder electrical contacts, type D collet system to suit a 7.0 to 6.1 mm diameter cable, and a nut for fitting a bend relief.

Connectors are delivered without fibre optic contacts. F7 fibre optic contacts must be ordered separately according to size and type of fibre (see pages 1 to 3).

Note: 1) The «Variant» position in the reference is used to indicate the presence of a collet nut for fitting the bend relief. The bend relief must be ordered separately.

Sample Models

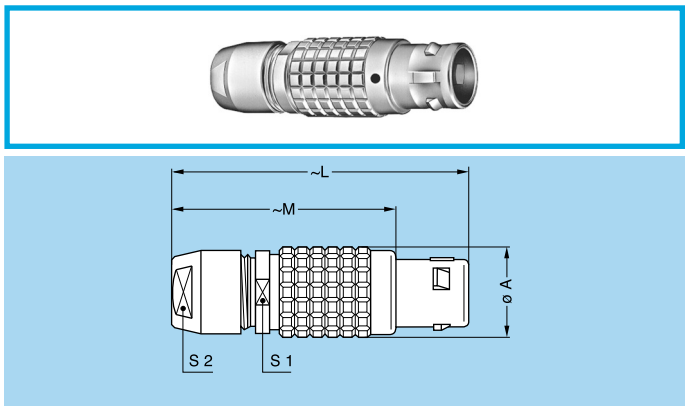

FGG Straight plug, key (G) or keys (A…L and R) and cable collet

Reference		Dimensions (mm)				
Model	Series	A	L	M	S1	S2
FGG1)	1B	12	72 2)	61 2)	10	9
FGG	2B	15	50	38	13	12
FGG	3B	18	58	43	15	14
FGG	4B	25	75	57	21	20
FGG	5B	35	103	78	31	30

Note: 1) Models can be delivered only with «T» type of cable adapter and nut for fitting a bend relief.
2) Lengths include the bend relief.

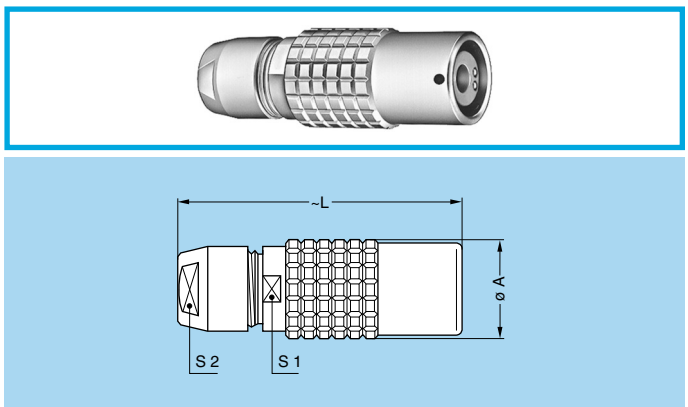

PHG Free socket, key (G) or keys (A…L and R) and cable collet

Reference		Dimensions (mm)			
Model	Series	A	L	S1	S2
PHG1)	1B	12.5	69.5 2)	10	9
PHG	2B	16.5	47.0	13	12
PHG	3B	19.0	56.0	15	14
PHG	4B	24.4	73.0	21	20
PHG	5B	34.2	99.0	31	30

Note: 1) Models can be delivered only with «T» type of cable adapter and nut for fitting a bend relief.
2) Lengths include the bend relief.

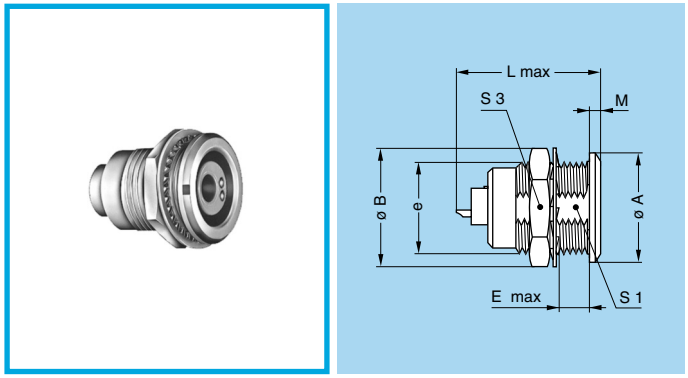

EGG Fixed socket, nut fixing, key (G) or keys (A…L and R)

Reference		Dimensions (mm)								
Model	Series	A	B	e	E	L max 1) F1	L max 1) F2	M	S1	S3
EGG	1B	14	16	M12x1	7.5	27.0	37.0	1.5	10.5	14
EGG	2B	18	19.2	M15x1	8.5	27.0	37.0	1.8	13.5	17
EGG	3B	22	25.0	M18x1	11.5	30.0	37.0	2.0	16.5	22
EGG	4B	28	34.0	M25x1	12.0	34.5	38.5	2.5	23.5	30
EGG	5B	40	40.0	M35x1	11.0	36.5	38.0	3.0	33.5	–

Note: 1) The overall length (L) may vary depending upon the type of electrical LV or fibre optic contact fitted.

Types

Multi fibre and Mixed fibre optic (F7 contact) + LV

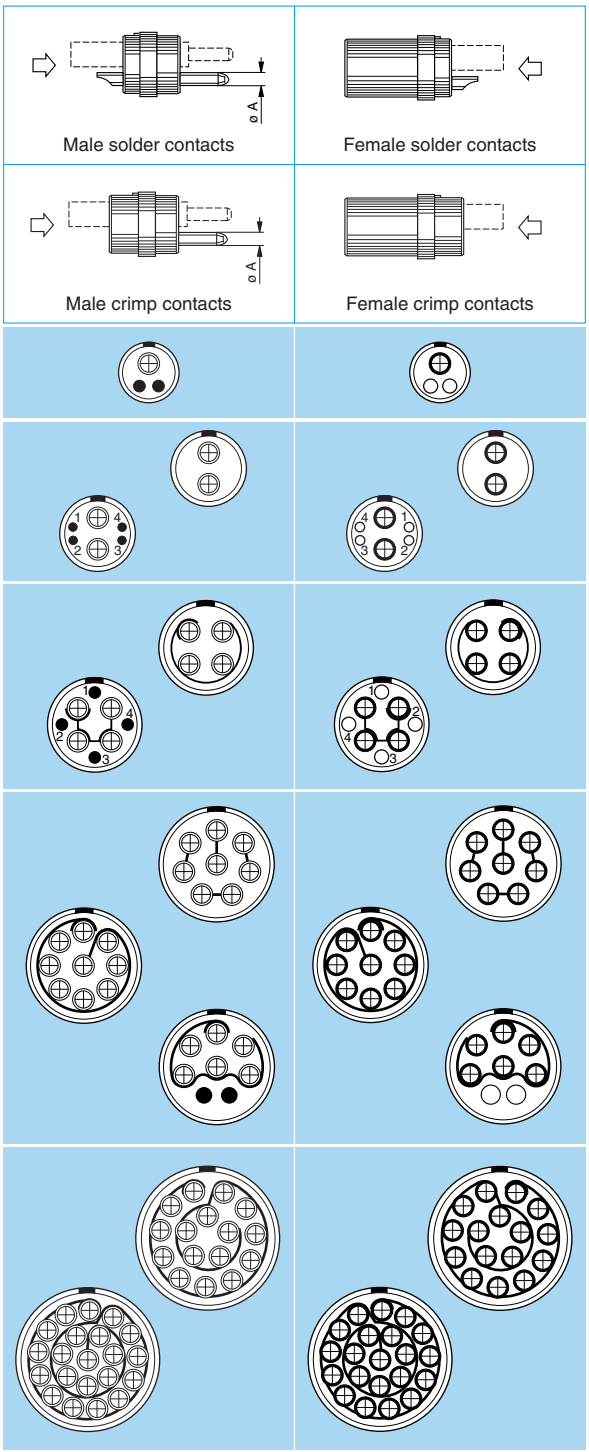

	Reference FO Contact Type F7	Fibre optic No	Low Voltage contact: Contact No	ø A (mm)	Contact type: Solder	Contact type: Crimp	Solder contact: Test voltage (kV rms)[1] Contact-contact	Solder contact: Test voltage (kV rms)[1] Contact-shell	Crimp contact: Test voltage (kV rms)[1] Contact-contact	Crimp contact: Test voltage (kV rms)[1] Contact-shell	Rated current (A)
1B 1K	92A	1	2	0.9	●	●	0.90	1.50	1.20	1.80	7.0
2B 2K	03A	2	–	–	–	–	–	–	–	–	–
	93B	2	4	0.7	●	●	0.85	1.20	0.85	1.25	6.0
3B 3K	03C	4	–	–	–	–	–	–	–	–	–
	95B	4	4	0.9	●	●	1.20	1.05	1.00	0.80	8.0
4B 4K	03G	8	–	–	–	–	–	–	–	–	–
	03H	9	–	–	–	–	–	–	–	–	–
	97B	6	2	1.6	●	●	1.20	1.30	1.30	1.05	13
5B 5K	03R	16	–	–	–	–	–	–	–	–	–
	03W	21	–	–	–	–	–	–	–	–	–

Note: [1] Test voltage

Test voltage (Ue):
(measured according to the IEC 60512-2 test 4a standard).

It corresponds to 75% of the mean breakdown voltage.
Test voltage is applied at 500 V/s and the test duration is one minute.

This test has been carried out with a mated plug and receptacle, with power supply only on the plug end.

Operating voltage (Us):
It is proposed according to the following ratio: $Us = \frac{Ue}{3}$

Caution:
For a number of applications, safety requirements for electrical appliances are more severe with regard to operating voltage.

Electrical Contact

Contact for plug, socket, and fixed socket

Ref.	Contact type
A	male solder
C	male crimp
L	female solder
M	female crimp
Z	no contact

Collets (K and B series)

T type cable adapter

	Reference		Cable ø		Bend relief to be used [1]
	Type	ø	max.	min.	
1B 1K	T	36	3.5	2.6	GMA.1B.030.D•
	T	46	4.5	3.6	GMA.1B.040.D•
2K	T	46	4.5	3.6	GMA.2B.040.D•
	T	56	5.5	4.6	GMA.2B.050.D•
	T	66	6.5	5.6	GMA.2B.060.D•
3K	T	46	4.5	3.6	GMA.2B.040.D•
	T	56	5.5	4.6	GMA.2B.050.D•
	T	66	6.5	5.6	GMA.2B.060.D•
	T	76	7.5	6.6	GMA.3B.070.D•
	T	86	8.5	7.6	GMA.3B.080.D•
	T	91	9.0	8.1	GMA.3B.080.D•
4K	T	46	4.5	3.6	GMA.2B.040.D•
	T	56	5.5	4.6	GMA.2B.050.D•
	T	66	6.5	5.6	GMA.2B.060.D•
	T	76	7.5	6.6	GMA.3B.070.D•
	T	86	8.5	7.6	GMA.3B.080.D•
	T	96	9.5	8.6	GMA.4B.010.D• [2]
	T	11	11.5	10.6	GMA.4B.011.D•
	T	13	13.5	12.6	GMA.4B.013.D•
5K	T	61	6.0	5.1	GMA.2B.057.R•
	T	71	7.0	6.1	GMA.3B.060.D•
	T	81	8.0	7.1	GMA.3B.070.D•
	T	91	9.0	8.1	GMA.3B.080.D•
	T	96	9.5	8.6	GMA.4B.010.D• [2]
	T	10	10.5	9.6	GMA.4B.010.D•
	T	11	11.5	10.6	GMA.4B.011.D•
	T	12	12.5	11.6	GMA.4B.012.D•
	T	13	13.5	12.6	GMA.4B.013.D•
	T	14	14.5	13.6	GMA.4B.013.D•
	T	15	15.5	14.6	heat-shrink tube [3]
	T	16	16.5	15.6	heat-shrink tube
	T	17	17.5	16.6	heat-shrink tube
	T	18	18.5	17.6	heat-shrink tube
	T	19	19.5	18.6	heat-shrink tube
	T	20	20.5	19.6	heat-shrink tube
	T	21	21.5	20.6	heat-shrink tube
	T	22	22.5	21.6	heat-shrink tube
	T	23	23.5	22.6	heat-shrink tube

D and M type collets

	Reference		Cable ø	
	Type	ø	max.	min.
2B	M	31	3.2	> 2.2
	D	42	4.2	> 3.2
	D	52	5.2	> 4.2
	D	62	6.2	> 5.2
	D	72	7.2	> 6.2
	D	82	8.2	> 7.2
	D	92	9.2	> 8.2
3B	M	52	5.2	> 4.2
	D	62	6.2	4.9
	D	72	7.7	> 6.2
	D	92	9.2	> 7.7
	D	10	10.0	> 9.2
	D	12	11.9	10.8
4B	M	62	6.2	4.9
	M	72	7.7	> 6.2
	M	92	9.2	> 7.7
	D	10	10.5	9.1
	D	12	12.0	10.6
	D	13	13.5	12.1
	D	15	15.0	13.6
5B	D	11	11.5	9.6
	D	13	13.5	11.6
	D	15	15.5	13.6
	D	17	17.5	15.6
	D	19	19.5	17.6
	D	21	21.5	19.6
	D	23	23.5	21.6
	D	25	25.0	23.6

Note:
1) The bend relief is to be ordered separately.
2) Add a short piece of heat-shrink tubing under the bend relief.
3) The heat-shrink tube is supplied.

All dimensions are in millimeters.

Fibre Optic Tooling

We offer a complete range of tools for fibre optic connector cable assembly.
Some tools are specific to each fibre optic contact type. When selecting necessary tooling, make sure you identify correctly the contact type used in the selected product.

DRV Complete workstation for fibre optic contact

Description
Comprehensive range of tools for terminating both single-mode and multi-mode fibres. Includes specific tools for F7 fibre optic contacts. Detachable termination case lid for use as polishing platform during field termination.
Rugged but aesthetically pleasing termination case which is ideal for field use or in-house terminations. Curing oven and inspection microscope should be ordered separately.

Part number
DRV.91.CF7.PN

Workstation Contents

Part Number	Description	Quantity	Number
WST.BT.175.55PT	Plastic box	1	1
WST.BR.150.8AC	Tweezers	1	2
WST.CH.252.5SR	Lint-free Cloth	1	3
WST.CS.125.CE	Kevlar cutters	1	4
WST.CO.020.52	Cotton bud (sachet of 20 pcs)	1	5
WST.DS.290.PT	Alcohol dispenser (supplied empty)	1	6
DCC.91.307.5LA	Extraction tool for F7 contact	1	7
DCS.F7.035.PN	Alignment device tool	1	8
DCS.91.G90.6E125	Microscope adapter for F7 contacts	1	9
WST.ME.354.8R	Epoxy mixer and pad	1	10
DOC.FO.CF7.0000	Terminating instructions for F7 contacts	1	11
WST.OU.135.10SZ	Fibre scribe	1	12
DCS.91.D01.LC	Polishing tool for F7 contacts	1	13
WST.OU.452.5MN	Large cable stripper	1	14
WST.PA.105.5525	Cleaning tissues	1	15
WST.PA.012.AOJ	Lapping film 12µm (yellow)	20	16
WST.PA.005.AOM	Lapping film 5µm (brown)	20	17
WST.PA.001.DIL	Lapping film 1µm (lavander) diamond	5	18
WST.PN.210.AS	Armoured cable cutter	1	19
WST.PN.145.AR	Cable cutter	1	20
WST.PN.103.0PG	Outer jacket stripper	1	21
WST.PN.203.CR	Buffer coating stripping tool	1	22
WST.PN.102.3CR	Primary coat stripper	1	23
DPE.99.003.1K	Crimp tool	1	24
WST.PL.322.5PT	Polishing platform	1	25
WST.RE.353.EPO	Epoxy resin + safety instructions	10	26
WST.SE.305.8PH	Syringe with needle # 19 & # 20	10	27
WST.TU.193.LN	Fibre shield for F7 contacts	4	28
WST.RG.150.AZ	Steel rule 6" (152 mm)	1	29
WST.SY.135.PA	Fibre length marking pen	1	30
WST.CS.155.AZ	Scissors	1	31

Note: The interior of the case is fitted with pre-formed plastic foam to provide secure storage of the tools.

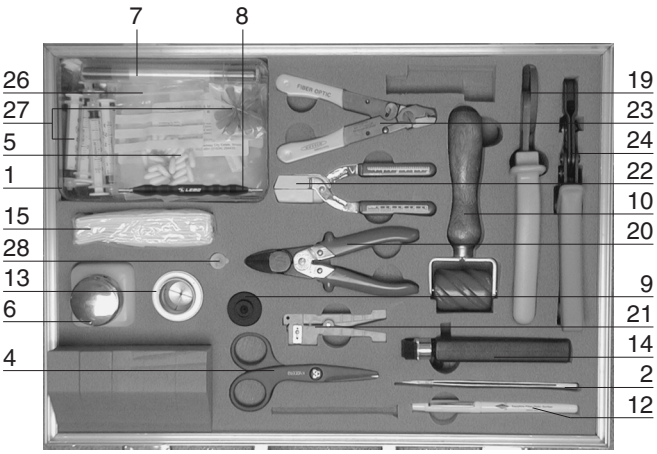

DPE Crimping tool for F7 fibre optic contact

Description
Crimping tool for capturing KEVLAR® strand on contact body.

Part number
DPE.99.003.1K [1]

Note: [1] Included in the LEMO F7 workstation.

WST Epoxy curing oven

Description
Oven for assisting in curing epoxy.

Part number	Voltage
WST.FR.220.VA	220 volts
WST.FR.110.VA	110 volts

DCS Polishing tool for fibre optic contacts

Description
Precision tool for polishing terminated fibre optic contacts with 1.25 mm ferrule.

Part number
DCS.91.D01.LC [1]

Note: [1] Included in the LEMO F7 workstation.

WST Fibre Inspection Microscope

Description
Microscope to assist in viewing termination operations and verifying fibre end finish. Zoom with 200 → 400 x magnification.
See adaptor below.

Part number
WST.FB.G00.301

DCS Microscope adaptor for fibre optic contacts

Description
Adaptor for final inspection of fibre optic contacts with 1.25 mm ferrule.
To be used with microscope WST.FB.G00.301.

Part number
DCS.91.G90.6E125 [1]

Note: [1] Included in the LEMO F7 workstation.

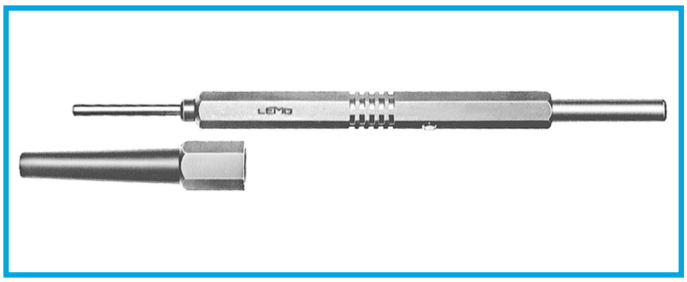

DCC Extractor for F7 fibre optic contact

Description
Manual tool for the extraction of the F7 contact.

Part number
DCC.91.307.5LA [1]

Note: [1] Included in the LEMO F7 workstation.

DCS F7 contact alignment device tool

Description
Simple tool with two threaded end for installation/extraction of the F7 contact alignment device.

Part number
DCS.F7.035.PN [1]

Note: [1] Included in the LEMO F7 workstation.

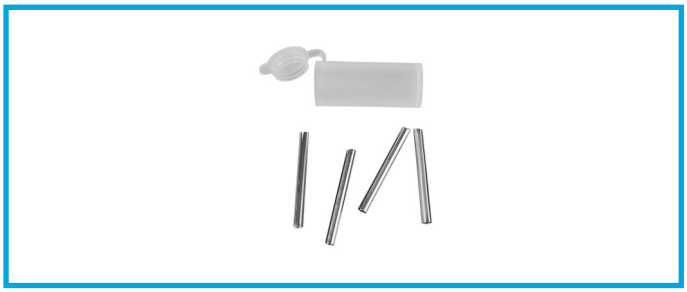

WST Fibre shield for F7 fibre optic contact

Description
To protect ferrule when curing epoxy.

Part number
WST.TU.193.LN [1]

Note: [1] Included in the LEMO F7 workstation.

Cable Termination

Detailed instructions for terminating single fibre cables with LEMO F7 fibre optic contacts are given in the reference manual DOC.FO.CF7.0000 supplied with the complete termination workstation (see page 10). After termination contacts shall be introduced in the main insulator as shown below. For purpose of cleaning they can also be removed.

Installation of F7 contact and alignment device

Insertion

The male fibre optic contact terminated on the cable must be inserted into the connector insulator from the back end until it comes to a stop. Make sure that the contact is correctly positioned into the inner antirotation key. Key is in line with the red dot on the rear of the contact (step 1).
Check that the contact is correctly retained by gently pulling on it (step 2).

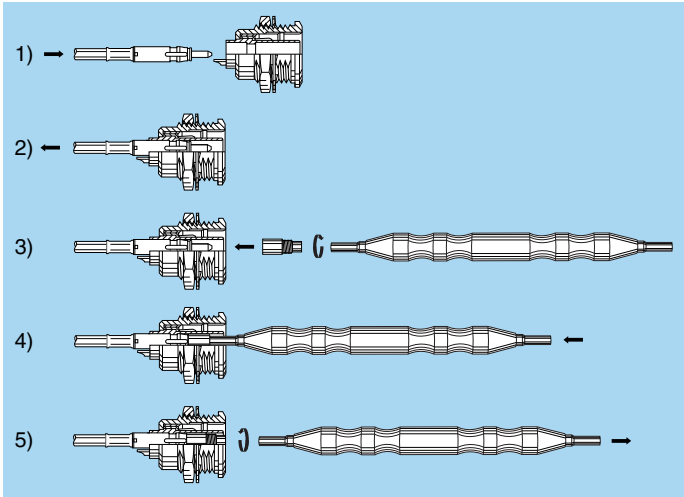

For female contacts, the alignment device shall be clipped onto the fibre optic contacts which is already fitted into female insulator. This procedure is performed using the tool, reference DCS.F7.035.PN.
The alignment device shall be first installed onto threaded end of the tool (step 3). Then clip the adapter (step 4), unscrew and remove the tool (step 5).

Extraction of alignment device

Screw the threaded end of the tool reference DCS.F7.035.PN (step 1) onto the alignment device.
Pull out strongly (step 2).

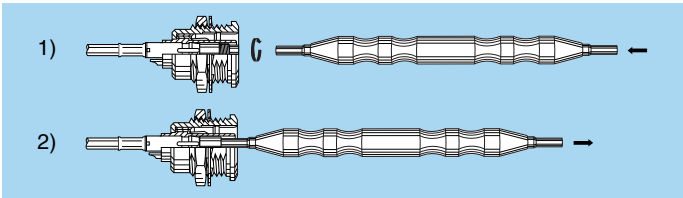

Extraction of F7 contact

Possible only for fixed socket, using the manual tool DCC.91.307.5LA. Shall be made with great care.

Note: The life time installation of the alignment device is minimum 300 cycles.

No reproduction or use without express permission of editorial or pictorial content, in any manner.
LEMO SA reserves the right to modify and improve specifications, at all times, without any notification.

LEMO HEADQUARTERS

SWITZERLAND
LEMO SA
Chemin des Champs-Courbes 28 - P.O. Box 194 - CH-1024 Ecublens
Tel. (+41 21) 695 16 00 - Fax (+41 21) 695 16 02 - e-mail: info@lemo.com

LEMO SUBSIDIARIES

AUSTRIA
LEMO Elektronik GesmbH
Lemböckgasse 49/E6-3
1230 Wien
Tel: (+43 1) 914 23 20 0
Fax:(+43 1) 914 23 20 11
sales@lemo.at

BRAZIL
LEMO Latin America Ltda
Av. José Rocha Bonfim,
214 Salas 224 / 225
Condomínio Praça Capital
Ed. Chicago
Campinas / SP - Brasil 13080-650
Tel: +55 (11) 98689 4736
info-la@lemo.com

CANADA
LEMO Canada Inc
44 East Beaver Creek Road, unit 20
Richmond Hill, Ontario L4B 1G8
Tel: (+1 905) 889 56 78
Fax: (+1 905) 889 49 70
info-canada@lemo.com

CHINA / HONG KONG
LEMO Electronics (Shanghai) Co., Ltd
First Floor, Block E,
18 Jindian Road, Pudong
Shanghai, China, 201206
Tel: (+86 21) 5899 7721
Fax: (+86 21) 5899 7727
cn.sales@lemo.com

DENMARK
LEMO Denmark A/S
Nybrovej # 97
2820 Gentofte
Tel: (+45) 45 20 44 00
Fax: (+45) 45 20 44 01
info-dk@lemo.com

FRANCE
LEMO France Sàrl
24/28 Avenue Graham Bell
Bâtiment Balthus 4
Bussy Saint Georges
77607 Marne la Vallée Cedex 3
Tel: (+33 1) 60 94 60 94
Fax: (+33 1) 60 94 60 90
info-fr@lemo.com

GERMANY
LEMO Elektronik GmbH
Hanns-Schwindt-Str. 6
81829 München
Tel: (+49 89) 42 77 03
Fax: (+49 89) 420 21 92
info@lemo.de

HUNGARY
REDEL Elektronika Kft
Nagysándor József u. 6-12
1201 Budapest
Tel: (+36 1) 421 47 10
Fax: (+36 1) 421 47 57
info-hu@lemo.com

ITALY
LEMO Italia srl
Viale Lunigiana 25
20125 Milano
Tel: (+39 02) 66 71 10 46
Fax: (+39 02) 66 71 10 66
sales.it@lemo.com

JAPAN
LEMO Japan Ltd
2-7-22, Mita,
Minato-ku, Tokyo, 108-0073
Tel: (+81 3) 54 46 55 10
Fax: (+81 3) 54 46 55 11
lemoinfo@lemo.co.jp

MIDDLE EAST
LEMO Middle East Gen. Trad. LLC
Concorde Tower 6th Floor,
Dubai Media City, P.O. Box 126732
Dubai, United Arab Emirates
Tel: +971 55 222 36 77
info-me@lemo.com

NETHERLANDS / BELGIUM
LEMO Connectors Benelux
De Trompet 1060
1967 DA Heemskerk
Tel. (+31) 251 25 78 20
Fax (+31) 251 25 78 21
info@lemo.nl

NORWAY / ICELAND
LEMO Norway A/S
Soerumsandvegen 69,
1920 Soerumsand
Tel: (+47) 22 91 70 40
Fax: (+47) 22 91 70 41
info-no@lemo.com

SINGAPORE
LEMO Asia Pte Ltd
4 Leng Kee Road,
#06-09 SiS Building
Singapore 159088
Tel: (+65) 6476 0672
Fax: (+65) 6474 0672
sg.sales@lemo.com

SPAIN / PORTUGAL
IBERLEMO SAU
Brasil, 45, 08402 Granollers
Barcelona
Tel: (+34 93) 860 44 20
Fax: (+34 93) 879 10 77
info-es@lemo.com

SWEDEN / FINLAND
LEMO Nordic AB
Gunnebogatan 30, Box 8201
163 08 Spånga
Tel: (+46 8) 635 60 60
Fax: (+46 8) 635 60 61
info-se@lemo.com

SWITZERLAND
LEMO Verkauf AG
Grundstrasse 22 B, 6343 Rotkreuz
Tel: (+41 41) 790 49 40
ch.sales@lemo.com

UNITED KINGDOM
LEMO UK Ltd
12-20 North Street, Worthing,
West Sussex, BN11 1DU
Tel: (+44 1903) 23 45 43
lemouk@lemo.com

USA
LEMO USA Inc
P.O. Box 2408
Rohnert Park, CA 94927-2408
Tel: (+1 707) 578 88 11
(+1 800) 444 53 66
Fax:(+1 707) 578 08 69
info-US@lemo.com

CAT.F7.LEN.P1103, © LEMO / Data subject to change, printed in Switzerland, updated March 2015

LEMO DISTRIBUTORS

ARGENTINA, AUSTRALIA, BRAZIL, CHILE, COLOMBIA, CZECH REPUBLIC, GREECE, INDIA, ISRAEL, NEW ZEALAND, PERU, POLAND, RUSSIA, SOUTH AFRICA, SOUTH KOREA, TAIWAN, TURKEY, UKRAINE
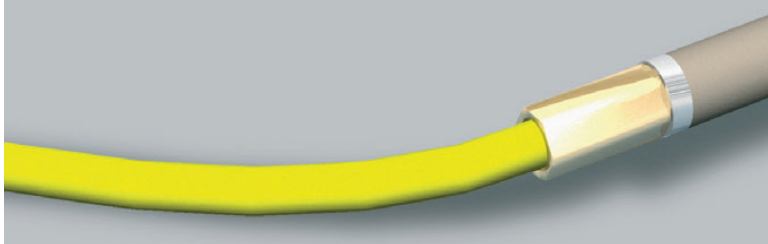
www.lemo.com